Remote I/O module CPX-AP-L

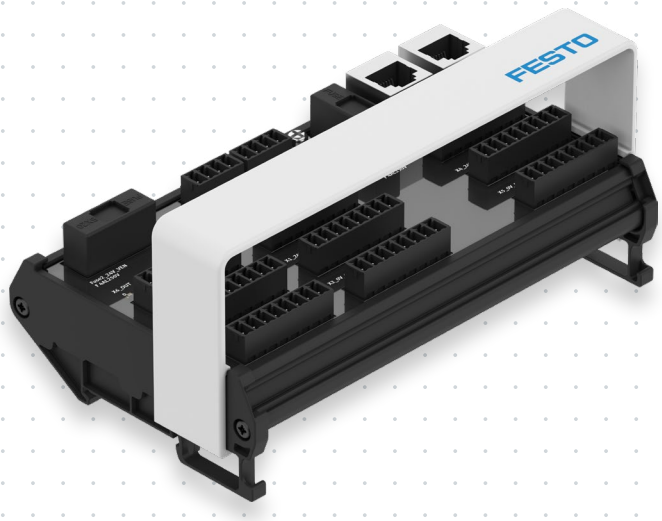

Highlights

- Decentralised and lightweight I/O system in IP20
- Highly flexible remote I/O system with maximum performance
- Scalable and easily combined with CPX-AP-I and CPX-AP-A to form a networked system
- Seamless connectivity with enhanced diagnostic capabilities
- Easy to integrate into the controller of your choice: PROFINET, PROFIBUS, EtherCAT, EtherNet/IP, ModbusTCP, CC-Link IE Field Basic
- Up to 80 modules networked in real time with a data rate of 200 Mbaud
- Cable lengths of up to 50 m between the modules
- NPN switching modules with 16 inputs or 16 inputs and 8 outputs on one module, or PNP switching modules with 16 configurable channels

The new I/O modules CPX-AP-L in IP20 can be seamlessly integrated into the CPX-AP system, including valve technology. They can be used for end-to-end networking and cost-effective integration of sensors and actuators, e.g. cylinders sensors and individual valves.

Variants and accessories for optimised design

The CPX-AP-L I/O module is available in three variants.
PNP switching with 16 configurable channels or NPN switching with either 16 inputs or 16 inputs with 8 outputs. Suitable accessories such as spring-loaded and screw terminals, as well as cables with RJ45 and M8 connection, are also available. This enables optimal engineering according to customer requirements and modular retrofitting.

Lower degree of protection, easy to install

With degree of protection to IP20, the I/O modules CPX-AP-L are particularly suitable for use in control cabinets or areas that do not require a higher degree of protection and have little installation space. The modules can be flexibly combined with different degrees of protection. Mounting them using DIN mounting rails is easy, saves space and enables sensors and actuators to be integrated cost-effectively in AP systems.

Plug and play – easy to integrate and commission

Centralised or decentralised: the I/O modules enable fast, easy integration into existing host systems and offer real-time data transparency thanks to a 200 Mbaud transmission rate and cycle times up to 250 µs. Additional bus protocols are in the planning phase. Up to 80 modules can be networked in one system and commissioning and diagnostics are simplified with the appropriate tools.

Additional information:

Product page
> www.festo.com/catalogue/cpx-ap-l

Topology

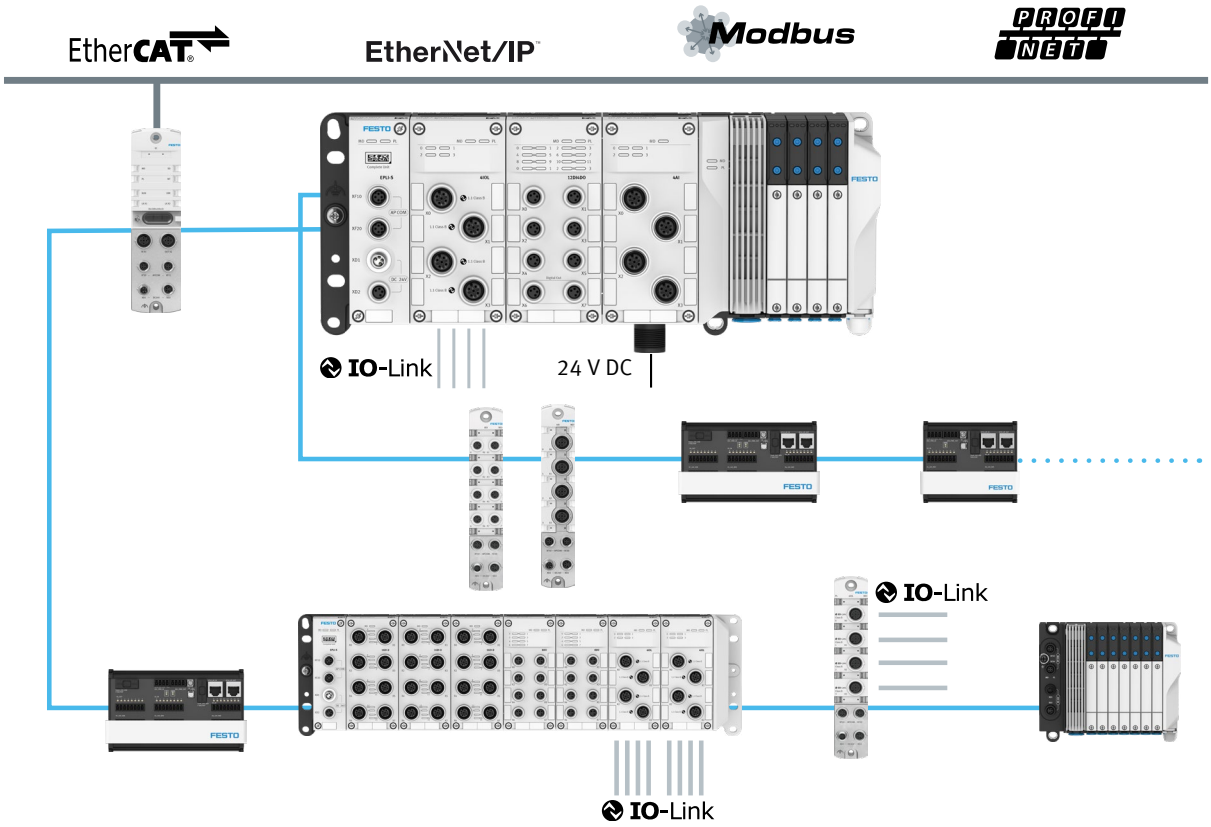

General technical data

IO module CPX-AP-L-...		16NDI	16NDI8NDO	16DIO
Digital inputs/outputs		16 inputs (NPN)	16 inputs/8 outputs (NPN)	16 configurable inputs/ outputs (PNP)
Dimensions with cover (W × L × H)		90 x 106 x 70 mm	90 x 152 x 70 mm	90 x 106 x 70 mm
Product weight without cover		127 g	178 g	110g
Product weight with cover		145 g	200 g	128 g
Ambient temperature		-20 ... +50 °C		-20...+60°C
Degree of protection		IP20		
Corrosion resistance class (CRC)		0		
LABS (PWIS) conformity		VDMA24364 zone III		
Type of mounting		On DIN rail		
Housing material		PA66 PVC		PA66 ABS
Note on materials		RoHS-compliant		
Communication interface	Protocol	AP		
	Feature	System communication XF10 IN / XF20 OUT		
	Type of connection	2x sockets		
	Connection technology	RJ45 socket		
	Number of pins/cores	4		