Media separated solenoid valves VODA
From the individual component to the integration solution

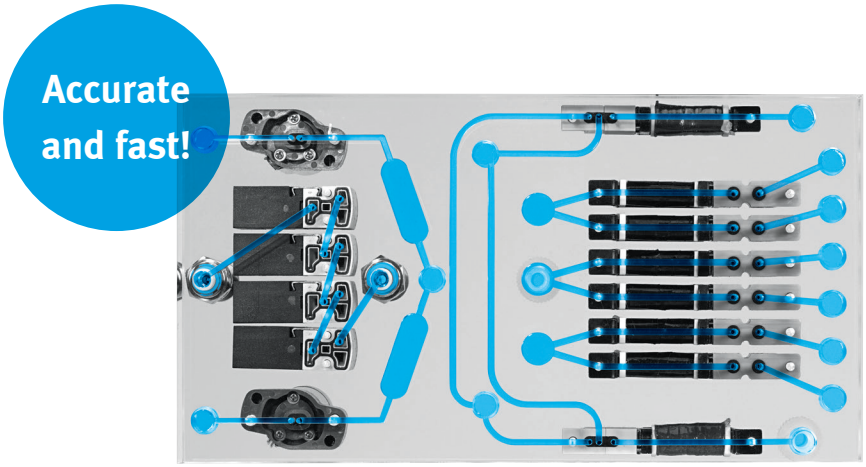

Precise metering results!

Highlights

- Media separated
- Maximum metering precision
- Low internal volume
- Low in dead space
- Reliable and precise
- Compact and lightweight
- Massive reduction of construction space

Ideal for laboratory analysis of clinical sample preparations, using highly integrated fluid technology from Festo. Sophisticated technology, advanced control electronics with maximum manufacturing precision together guarantee precise metering results from Festo liquid handling solutions. Included in the plan for maximised throughput: the media separated solenoid valves VODA, integration technology and the planar surface gantry EXCM.

For precise metering: media separated solenoid valves VODA
Diversity for any application: the selection of media valves leaves no wishes unfulfilled. Ideal for particularly compact assembly: the VODA-FD60.

For space-saving safety: integration technology
The compact embedding of almost all fluid channels reduces the requirements for tubing connections and interfaces as well as installation effort to a minimum. It is also almost error-free for installation and maintenance.

For enhanced movement and increased process reliability: the planar surface gantry EXCM
The gantry transports the microtitre plate efficiently. With the effect that metering becomes faster and more precise, and also that the risk of contamination is reduced. At the same time, handling is reduced, becoming easier and more flexible.

Systems for the future of laboratory automation

For a long time now, intensive efforts have been made to achieve a high degree of automation in laboratory analyses. The strong growth in demand for analyses goes hand in hand with the demand for rational and highly economic working methods in order to keep costs within expedient limits. At the same time, the error control is increased and highly-qualified laboratory personnel is relieved of undemanding routine work. This creates time for dealing with more demanding tasks.

Precise, reliable, compact and inexpensive – highly integrated fluid technology

Festo has pursued their target of minimising the installation effort required for complex automated technical tasks. An important guarantee for success is here the simultaneous maximisation of reliability and precision of the overall automated processes. This can be realised through optimised control of the required automated individual processes – and the construction space can generally be severely reduced. Only in this scenario and in combination with the integration technology from Festo can components such as the media separated solenoid valve VODA really utilise their potential.

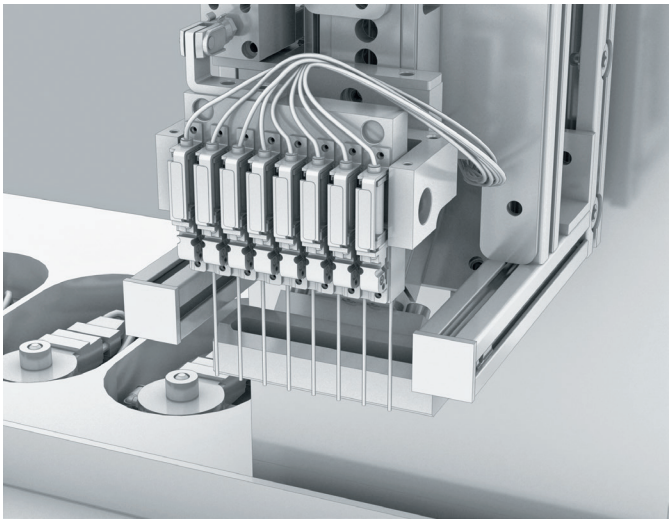

Precise metering, even when transporting different fluids simultaneously: dispenser module with VODA valves at a dispense head.

Important module – integration technology

The so-called integration technology embeds almost all fluid and energy conductors into a suitable support system. Fluid guidance and electric circuit boards with control electronics and software are thus integrated into a common support system. This permits the maximum connection density between the individual components, and allows the mechanical, electrical and fluidic interfaces to be positioned freely. The result is highly compact units which can be connected and operated without being confused. Thanks to the clear and well-organised connection structure on the manifold duct plate systems, maintenance too is substantially faster and more secure.

Such systems are used more and more in clinical analyses and in sample preparation.

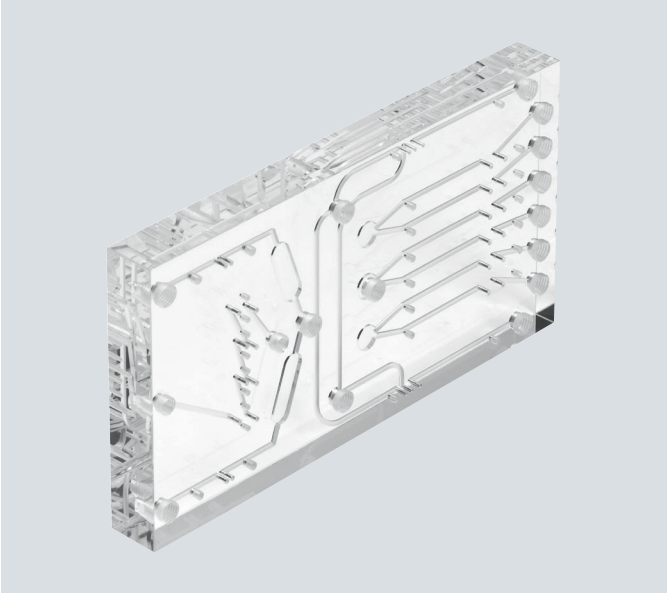

VODA manifold. Can clearly be seen on the Plexiglas acrylic glass plate: the fluid-guiding channels.

Light and safe: integration technology from Festo

Integration solutions can be designed highly individually and are therefore easy to fit into their environment. This technology is ideal wherever space optimisation, rapid and error-free installation are as important as reduced part diversity, simple maintenance and up to 60% less weight.

Ideal for fluid handling: transparent manifold duct plates

Manifold duct plate systems made of PEEK, PC or PMMA can be used for pump and transport functions, measuring cells and mixing and tempering areas. PC or PMMA is characterised by its glass-like transparency and thus provides a clear view of what is happening inside the channel structures of the manifold duct plate. In particular for fluids, it provides excellent visual control and monitoring options with optimised handling and low device weight.

Applications which demand a higher chemical resistance can be manufactured in PEEK.

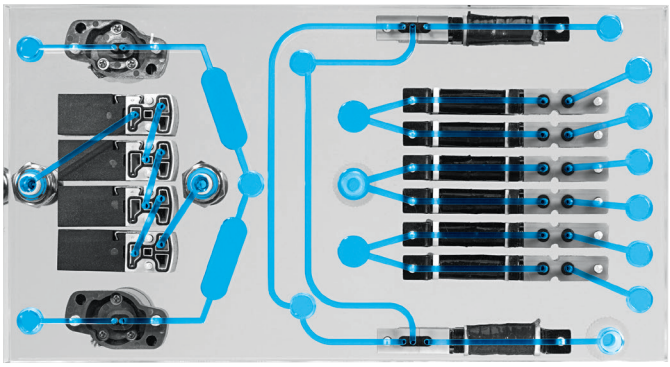

Manifold duct plate made of PMMA; the fluid channels are blue

Construction

The manifold duct plates are a composite of, for example, two transparent layers with construction thicknesses of 12 mm to 70 mm, thus avoiding unwanted glue or sealing substances. The channels for guiding the fluid are constructed via these layers. Precise holes for mounting the valves and the connection fittings ensure an optimised and reliable fluid inlet and outlet.

Even with small batch sizes, Festo is able to meet stringent customer requirements which combine a complex structure, high precision and excellent optics – based on individual drawings.

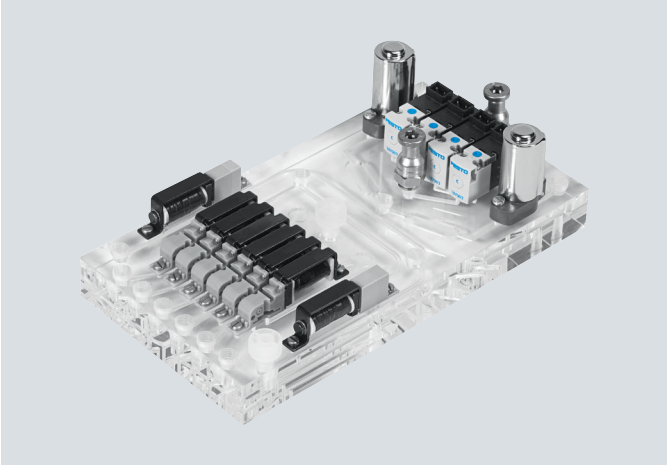

A manifold duct plate made of PMMA with integrated VODA valves

Compact and flexible: modular dispensing system

High metering precision – reduced risk of contamination – mass-optimised positioning movement

As far as the actual transport of fluids with integration technology is concerned, Festo provides handling systems that are optimised for space and throughput. An example is the planar surface gantry EXCM for precise positioning or adaptation to transport processes in very cramped areas. Common to all of them: the strain relief on the movement. Each well in turn approaches the needle which carries out a stroke of maximum 2 - 3 mm – and not the other way around. The result is substantially improved metering precision, a reduced risk of contamination and higher throughput. The controllers for these transport sequences or fluidic processes can control optical high resolution cameras or sensor systems with integrated intelligence. This means that a very high level of reliability and reproducibility of the overall process sequence can be achieved.

The electrically controlled planar surface gantry allows loads of up to several hundred grams to be moved precisely and reliably. It covers a maximum working space of 360 by 700 millimetres. aAn electric axis EGSK with strokes of up to 100 mm is used for the Z movement. The dispense head is mounted on the axis. The system is rounded off by stepper motors, motor controllers and a multi-axis controller.

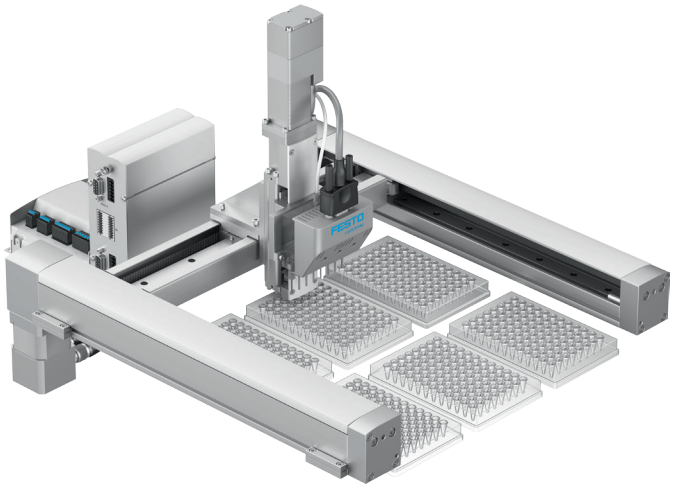

Even various fluids with different viscosities can be dispensed in parallel with an 8-channel dispense head by moving the dispense head.

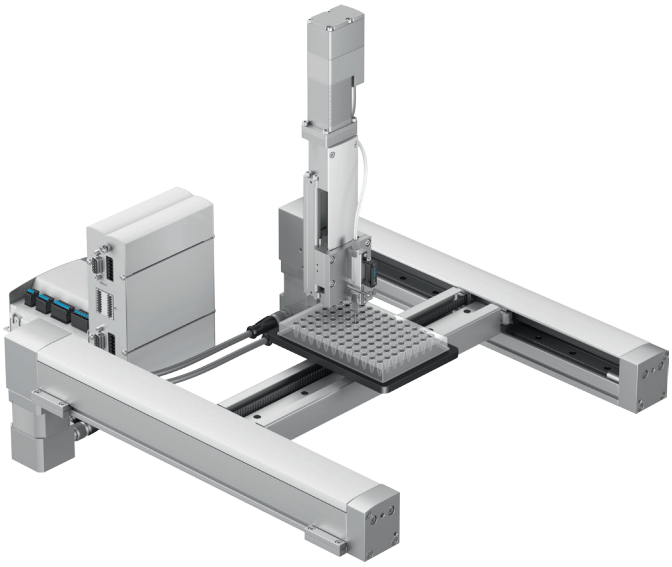

Fluids with different viscosities are dispensed with a single-channel dispense head by moving the microtitre plate.

Variable dispense heads

Reliability, precision and compact dimensions are key when handling liquids in laboratories. Festo offers flexible dispense heads which can be perfectly adapted to your specific requirements. Together with Festo handling systems, this creates a ready-to-install solution which simplifies planning and increases productivity.

The advantages at a glance:
- Compact 9 mm grid
- Maximum dosing precision in the range from 10 to 1000 µl with typical CV ‹ 1%
- Maximum flexibility
- Suitable for dosing
- Small internal volume makes it easy to rinse

Single-channel dispense head VTOE-1-1
This compact dispense head is optimally sized for the 9 mm grid and facilitates very high precision dosing.

Typical applications:
- Producing dilutions
- Adding nutrient solutions
- Dosing reagents

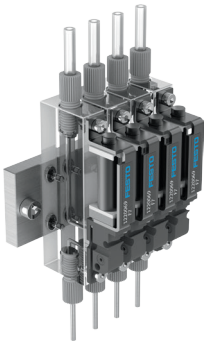

Multiple dispense head VTOE-4-4
Up to eight dispense heads can be modularly mounted on a rail. The multi head enables different fluids and fill quantities to be dosed in parallel.

Typical applications:
- Independent dosing of different fluids
- Dosing reagents

8-channel dispense head with cover VTOE-8-8-C
The system is specifically suited for microtitre plates and facilitates a very high throughput as well as dosing of various fill quantities and fluids. Every channel is individually controlled, ensuring maximum accuracy. Easy connections thanks to sub-D plug.

Typical applications:
- Preparing samples
- Adding fluids in microtitre plates

Compact, reliable, precise: VODA valves

With the valves type VODA, you have media separated solenoid valves at your disposal which are perfectly adapted to your laboratory automation requirements. Compact in dimensions, high process security in operation and high-precision metering: these are the central features of this valve family. Another feature is the wide range of variants. This makes them suitable for different automation concepts – and able to survive contact with highly aggressive media undamaged.

Variants
- Media separated
- Large number of valve functions
- Connection options (tube, flange, cartridge)
- Materials used (PPS or PEEK, FFKM or FKM)
- Different operating voltages

Media separated solenoid valves

The solenoid valves VODA are directly actuated diaphragm valves. The basic condition of the VODA 2/2-way valves is normally closed (NC). The medium is therefore at input 1. On activation of the coil, the valve to output 2 opens (see Fig. 1). With the VODA 3/2-way valves, the medium is at input 2 = COM. By selecting the output, it is now possible to realise a normally open or normally closed function.

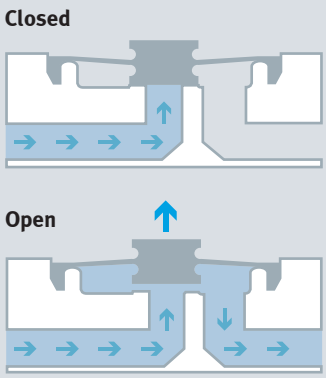

Fig. 1

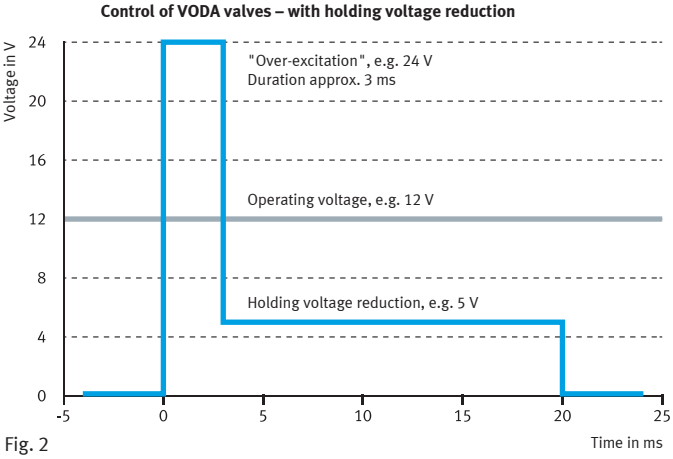

Fig. 2

Control electronics for increased metering precision and reduced energy consumption
The printed circuit board developed by Festo especially for the new VODA valve generation permits momentary increases of the operating voltage of the solenoid coils to a higher voltage level ("over-excitation") which is then lowered to a far lower "holding voltage level" (see Fig. 2).

Always identical and precise: metering
Depending on how the pressure is defined, the metering of the fluid to be transported is higher or lower. The opening pressure of the valve is therefore defined through the pretension and flexibility of the diaphragm. This permits exceptionally accurate metering of the medium passing through. The graph shows the relationship between the flow rate and the pressure.

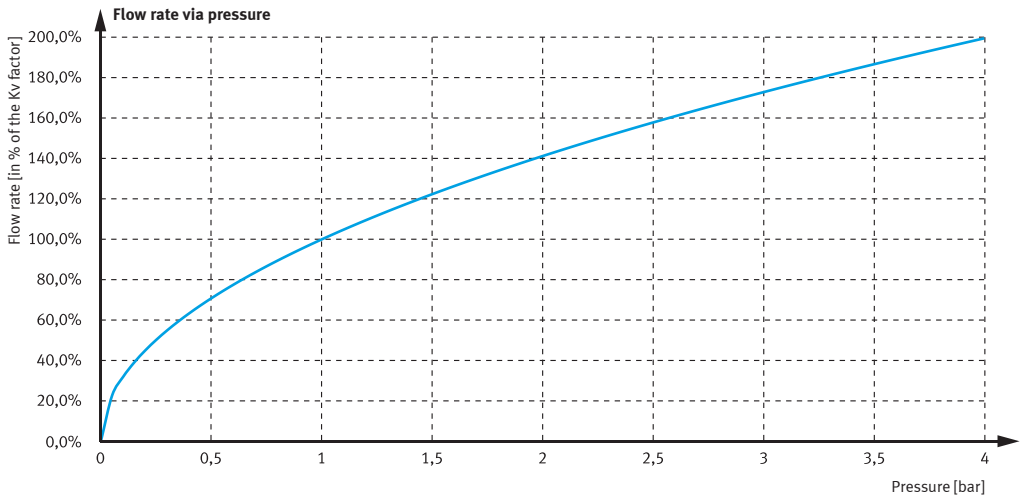

VODA-*D60-M22C and -B22

Unbelievably small, with dimensions of 4.2 x 4.2 mm! This makes the media valves VODA-*D60-M22C and -B22 ideal for densely-assembled microtitre plates with up to 384x application.

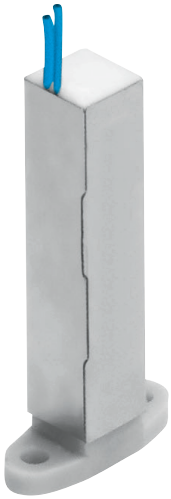

Technical data

	VODA-*D60-M22C	VODA-*D60-B22
Valve function	2/2-way NC Directly actuated Monostable	2/2-way Directly actuated Double solenoid
Ports	Flanged connection Tube coupling	Flanged connection Tube coupling
Size	Cartridge version 4.2 x 4.2 x 23.1 mm (L x W x H) Flange version 10.4 x 4.2 x 23.1 mm (L x W x H) Tube nipple version 4.2 x 4.2 x 28.6 mm (L x W x H)	Cartridge version 4.2 x 4.2 x 23.1 mm (L x W x H) Flange version 10.4 x 4.2 x 23.1 mm (L x W x H) Tube nipple version 4.2 x 4.2 x 28.6 mm (L x W x H)
Nominal size	0.4 mm	0.4 mm
Pressure range	Input 0 ... 1.0 bar Output 0 ... 0.5 bar	Input 0 ... 1.0 bar Output 0 ... 0.5 bar
Kv factor	H_2O 42 ml/min	H_2O 50 ml/min
Switching time	H_2O 11 ms	Actuation time 0.2 ... 1 s
Temperature range	Medium 10 ... 50 °C Ambient 10 ... 50 °C	Medium 10 ... 50 °C Ambient 10 ... 50 °C
Operating voltage	5 V DC 12 V DC	3 V DC 5 V DC 12 V DC 24 V DC
Power consumption	5 V DC 1.0 W 12 V DC 1.2 W	2.4 W (5 V, 12 V, 24 V DC) 3.0 W (3 V DC)
Duty cycle	5 V DC 40 % 12 V DC 30 %	20 %
Material coming into contact with media	Housing PEEK Diaphragm FFKM or FKM	Housing PEEK Diaphragm FFKM or FKM

The VODA valves

VODA-FD64

This solenoid valve, too, convinces through its slim footprint of less than a square centimetre. With its extremely low internal volume of 3.3 µl and an output volume of 8.3 µl, it is possible to dose with exceptional precision and sensitivity.

Technical data

	VODA-FD64
Valve function	2/2-way NC Directly actuated
Ports	Flanged connection
Size	10.4 x 8.9 x 28.0 mm (L x W x H)
Nominal size	0.8 mm
Pressure range	Input 0 ... 1.0 bar Output 0 ... 0.5 bar
Kv factor	H_2O 215 ml/min
Switching time	H_2O 9 ms Air 8 ms
Temperature range	Medium 5 ... 50 °C Ambient 5 ... 40 °C
Operating voltage	12 V DC 24 V DC
Power consumption	0.9 W
Duty cycle	100 %
Material coming into contact with media	PEEK, FFKM PPS, FKM PPS, EPDM

VODA-FD69

The 3/2-way functions and the low dimensions characterise this directly actuated, soft sealing, media-separated and small media valve. It is suitable for distributing small amounts of fluid into manifolds.

– For higher flow rates: VODA-FD75 (see p. 8)

VODA-*D72

Low internal volumes IN and OUT totalling 10 microlitres are a feature of the 2/2-way valve. Its narrow width makes this valve ideal for metering applications with 96 microtitre plates. The valve distances guarantee sufficient heat dissipation.

Technical data

	VODA-FD69	VODA-*D72
Valve function	3/2-way Directly actuated	2/2-way NC Directly actuated
Ports	Flanged connection	Flanged connection Tube coupling
Size	47.0 x 6.0 x 12.5 mm (L x W x H)	Flange version 50.0 x 6.0 x 12.5 mm (L x W x H) Tube nipple version 39.0 x 7.0 x 19.4 mm (L x W x H)
Nominal size	0.8 mm	0.8 mm
Pressure range	2 -> 1: 0 ... 0.8 bar 2 -> 3: 0 ... 1.0 bar 1-> 2: 0 ... 0.3 bar 3 -> 2: 0 ... 0.5 bar	Input 0 ... 1.0 bar Output 0 ... 0.5 bar
Kv factor	H_2O ≥ 210 ml/min (dependent on the direction of flow)	H_2O 180 ml/min
Switching time	≤ 6 ms (dependent on the connection)	H_2O 7 ms
Temperature range	Medium 5 ... 50 °C Ambient 5 ... 40 °C	Medium 5 ... 50 °C Ambient 5 ... 40 °C
Operating voltage	12 V DC 24 V DC	12 V DC 24 V DC
Power consumption	2.7 W	1.8 W
Duty cycle	50 %	100 %
Material coming into contact with media	PEEK, FFKM PPS, FKM	PEEK, FFKM PPS, FKM

The VODA valves

VODA-FD75

The diaphragm valve with its very small dimensions and its connection flange can be mounted onto manifold blocks or other supports. Optional design for high resistance to chemicals, made of PEEK.

VODA-FD76

The 3/2-way function and the low dimensions characterise this directly actuated, soft sealing, media-separated and small media valve. It is suitable for distributing small amounts of fluid into manifolds.

– For higher flow rates: VODA-FD69 (see p. 7)

Technical data

	VODA-FD75	VODA-FD76
Valve function	2/2-way NC Directly actuated	3/2-way Directly actuated
Ports	Flanged connection	Flanged connection
Size	25.0 x 14.0 x 31.7 mm (L x W x H)	47.0 x 7.5 x 12.5 mm (L x W x H)
Nominal size	1.0 mm	0.8 mm
Pressure range	Input -0.2 ... 2.0 bar Output -0.5 ... 2.0 bar	2 0 ... 1.0 bar 1, 3 0 ... 0.5 bar
Kv factor	H_2O 260 ml/min	H_2O ≥ 205 ml/min (dependent on the direction of flow)
Switching time	11 ms	≤ 9 ms (dependent on the connection)
Temperature range	Medium 0 ... 40 °C Ambient 0 ... 40 °C	Medium 5 ... 50 °C Ambient 5 ... 40 °C
Operating voltage	12 V DC 24 V DC	12 V DC 24 V DC
Power consumption	2.8 W	2.7 W
Duty cycle	100 %	50 %
Material coming into contact with media	PEEK, FFKM, PTFE PPS, FKM, PTFE PCTFE, FFKM, PTFE	PEEK, FFKM PPS, FKM

VODA-LD77

The VODA valves in the LD77 series are 2/2-way valves, soft sealing and media-separated. Due to their M6 and ¼" UNF connections, they can be used in conventional top elements (tubing connections with fittings). The high flow rate for these applications make these valves particularly suitable for distribution, for example for cleaning fluids in flushing processes or for switching drop-off currents.

VODA-LD78

The VODA valves in the FD78 series are currently the largest valves in the family. The soft sealing and media-separated 2/2-way valves can be used in conventional top elements (tubing connections with fittings) due to their connections 1/4" and 1/8". The high flow rate for these applications make these valves particularly suitable for distribution, for example for cleaning fluids in flushing processes or for the control of drop-off currents.

Technical data

	VODA-LD77	VODA-LD78
Valve function	2/2-way NC Directly actuated	2/2-way NC Directly actuated
Ports	Threaded connection UNF ¼-28 Flat Bottom or M6 Flat Bottom	Threaded connection RC thread NPT thread 1/4" and 1/8"
Size	25.9 x 24.0 x 48.0 mm (L x W x H)	40.0 x 42.0 x 71.0 mm (L x W x H)
Nominal size	2.0 mm	4.0 mm or 6.0 mm
Pressure range	Input -0.9 ... 2.0 bar Output 0 ... 1.0 bar	Input -0.9 ... 2.0 bar Output 0 ... 0.5 bar
Kv factor	H_2O 1300 ml/min	4 mm H_2O 5.7 l/min 6 mm H_2O 7.0 l/min
Switching time	16 ms	35 ms
Temperature range	Medium 5 ... 50 °C Ambient 5 ... 50 °C	Medium 5 ... 60 °C Ambient 5 ... 60 °C
Operating voltage	12 V DC 24 V DC	12 V DC 24 V DC
Power consumption	2.8 W	6.0 W (4 mm) 10.0 W (6 mm)
Duty cycle	100 %	100 %
Material coming into contact with media	PEEK, FFKM, PTFE PPS, FFKM, PTFE	PEEK, FFKM, PTFE PPS, FKM, PTFE

Fit for the future?
Fields of application for laboratory automation from Festo

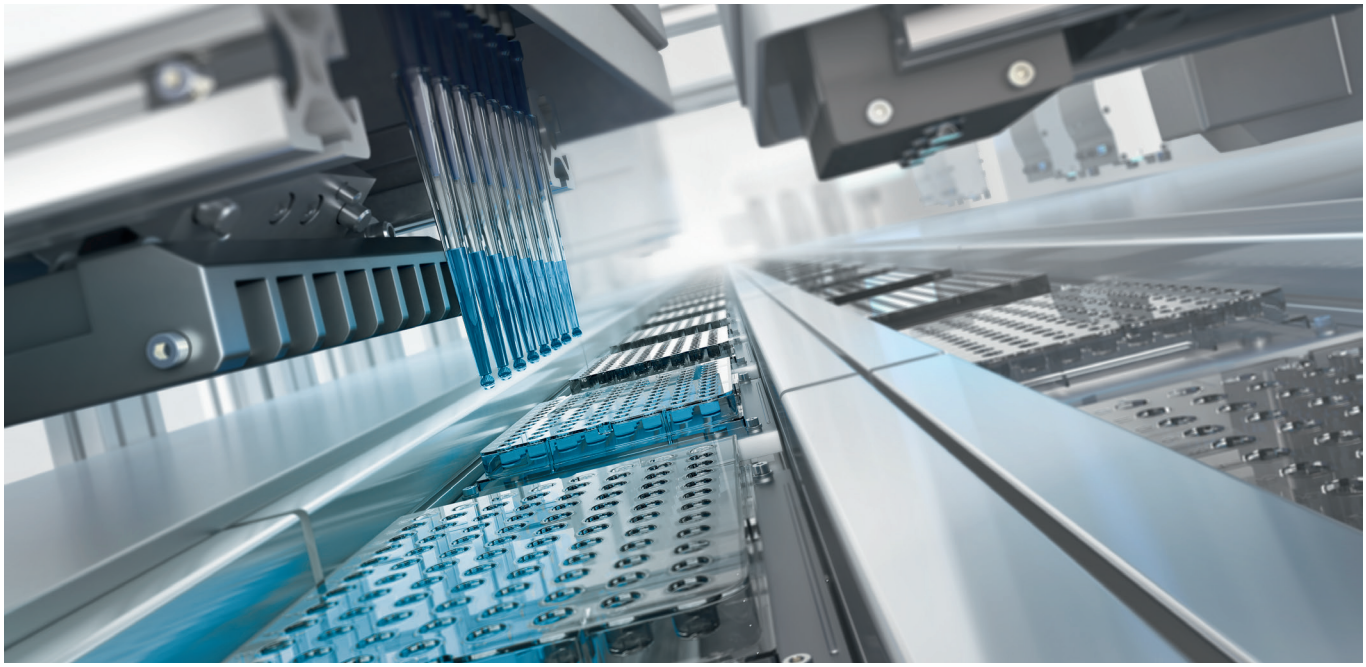

Our integration solutions with VODA valves are used in the following fields:

- **photometry**
- **spectroscopy**
- **cytometry**
- **DNA analysis**
- **other analytical procedures**

Large scope of services

- combining, mixing, gassing, degassing, tempering of fluids
- feeding and metering of fluids in test tubes, ampoules, bubble tubes, sample holders and wells
- dispensing and pipetting of fluids

Advantages of solutions with VODA valves

- high precision of the added volume
- short switching times – high throughput
- variable dosage – several fluids can be added in parallel
- small internal volumes of lines – low sample quantities
- no empty spaces
- extremely hygienic solution
- everything from a single source: documented and tested for correct function

Adapted: solutions according to your requirements

Do you have special requirements? Then make use of our construction kit! In this way you can design your laboratory handling so that it fits perfectly to your requirements.
No surcharge!

You can modify the following criteria

- accuracy
- viscosity of the media
- feeding speed
- material
- single channel or multi-channel
- volume
- flow rate via pressure

135381 en 2016/04 – Errors and omissions excepted