# White Paper
# Proportional valves for closed-loop control of inert gases in process automation

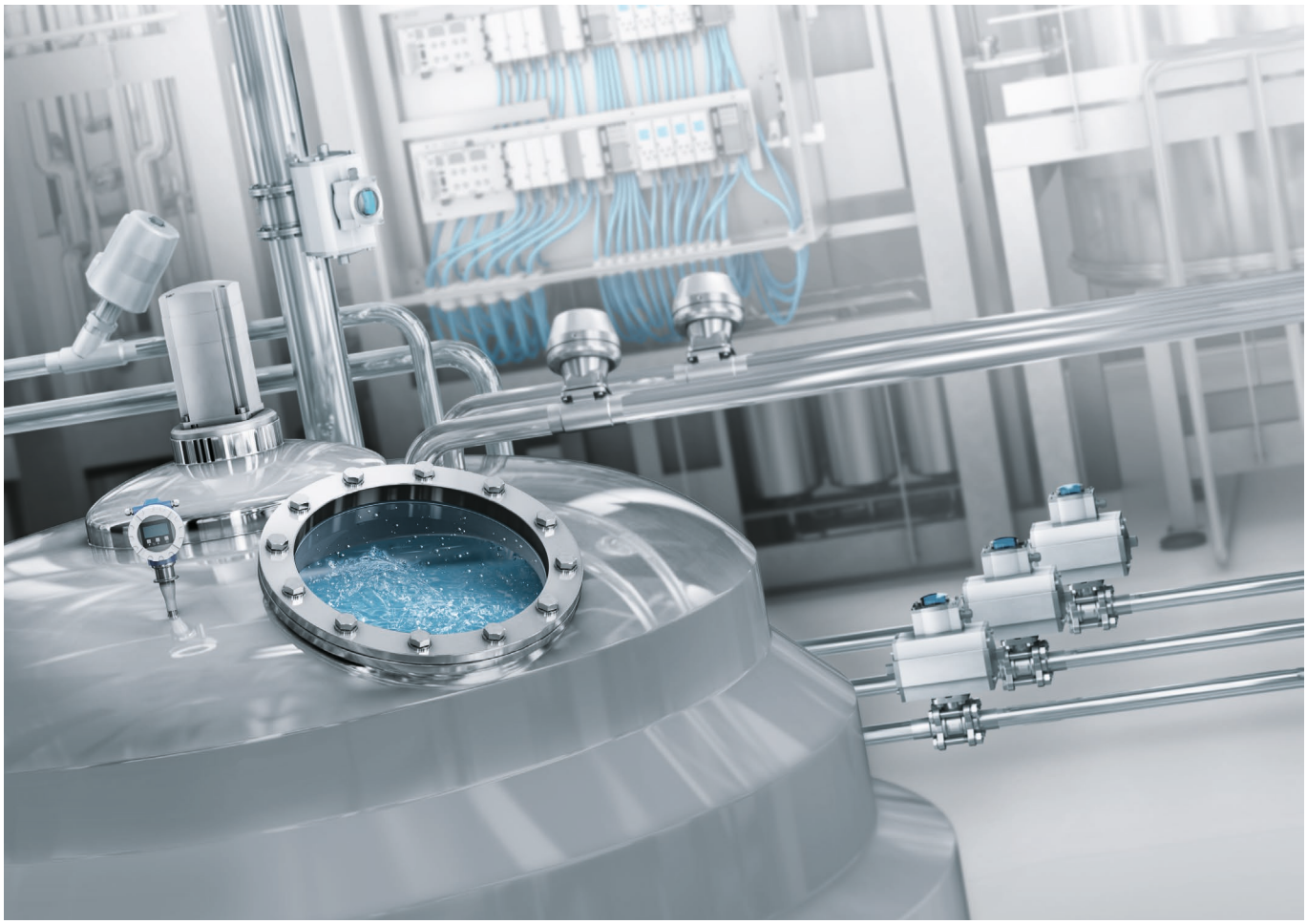

**In many process automation applications, the pressure and flow of gases are controlled. Explosion protection requirements mean that an inert atmosphere is often created and maintained in reactors and process tanks in a plant. This is usually done with nitrogen and in some cases also with argon. Other applications include the transfer of materials between process tanks and filling, using inert gases, air, sterile air and carbon dioxide. Pressurising mechanical seals with gas is another application. The following functions are primarily covered:**

- Inertisation, i.e. complete replacement of the contained gas volume (uncontrolled, high flow rate)
- Pressure blanketing (pressure control)
- Overflowing in containers and process tanks (flow control)
- Material transfer (pressure control)
- Pressurising and monitoring mechanical seals with gas

To cover these functions, dedicated lines with regulating valves and flow meters are required in many existing applications for each pressure and gas level. Depending on the process and industry requirements, the investment costs for this type of control can be between € 3,000 – 10,000 per control circuit.

Proportional valve technology represents an interesting alternative for closed-loop control of inert gases in process automation. It achieves the same accuracy as the existing technology, but the level of installation and investment required is lower. Installing a control station in a compact control cabinet also saves space and simplifies access to all process components. The ability to integrate proportional valves on valve terminals reduces space requirements, simplifies automation and provides more diagnostics options. In some cases, processes which have previously been carried out manually can be automated simply and cost-effectively.

**1. Proportional valve technology**

Proportional valves or proportional pressure regulators are dynamic control valves which not only enable discrete switching positions like open/closed, but, when combined with a proportional solenoid or two switching valves as pilot valves, also enable the dynamic closed-loop control of the outlet pressure. They also provide an easy means of closed-loop flow rate control when combined with appropriate downstream sensors.

Figure 1 shows a closed-loop control circuit with a single closed-loop controller. In a closed-loop control circuit, the control unit receives regular feedback about the actual value of the controlled variable x. It compares this value with the setpoint value w, calculates the system deviation e and extrapolates the manipulated variable, which is transmitted to the positioner. The positioner readjusts the valve and reduces the deviation. The presence of various disturbance variables z, such as pressure drops in the network upstream and downstream of the valve, mean that, in general, these control circuits are constantly working. The speed and accuracy of a closed-loop control system depend on the general design of the controlled system, the type of closed-loop controller and the components used.

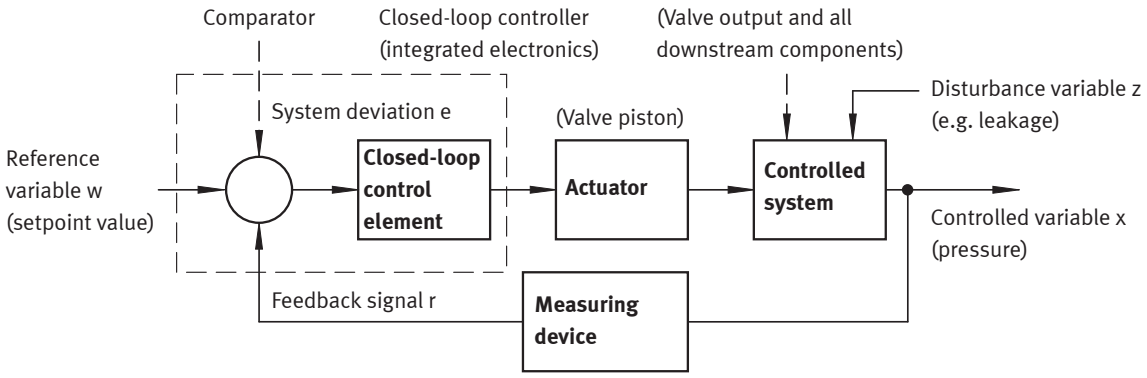


Figure 1: Conventional closed-loop control circuit

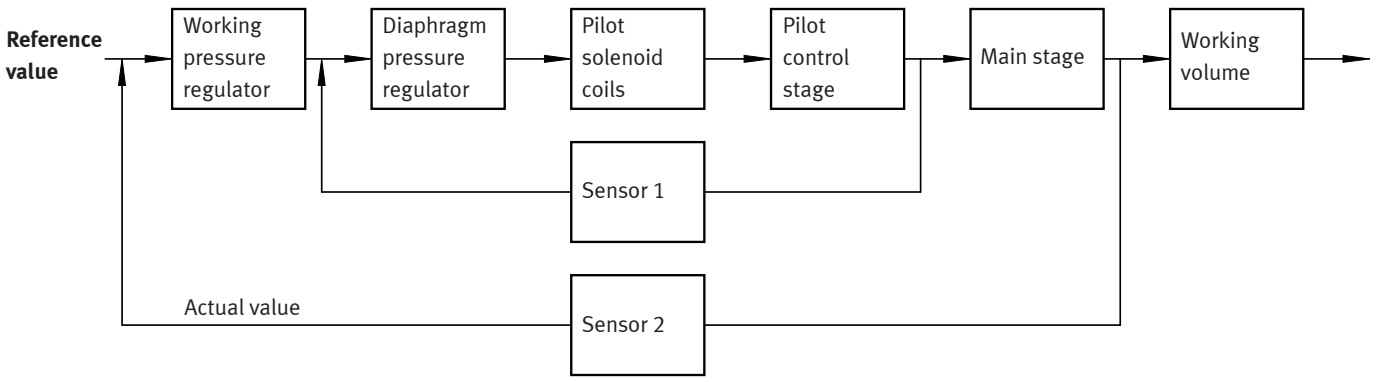


Figure 2: Multi-sensor control (cascade control) of the Festo proportional pressure regulator VPPM with two integrated pressure sensors

© Copyright 2014, Festo AG & Co. KG

Cascade control improves the accuracy and stability of a controlled system. In cascade controls, several closed-loop control circuits are nested inside one another. The overall controlled system is divided into smaller circuits which are easier to control. This increases the accuracy and stability of the closed-loop control system compared with a direct-action closed-loop controller. Festo proportional pressure regulators feature integrated multi-sensor control (Figure 2) based on two pressure sensors and feedback circuits. This results in extremely stable and accurate control characteristics in combination with the integrated PID controller, even in challenging applications (Figure 3).

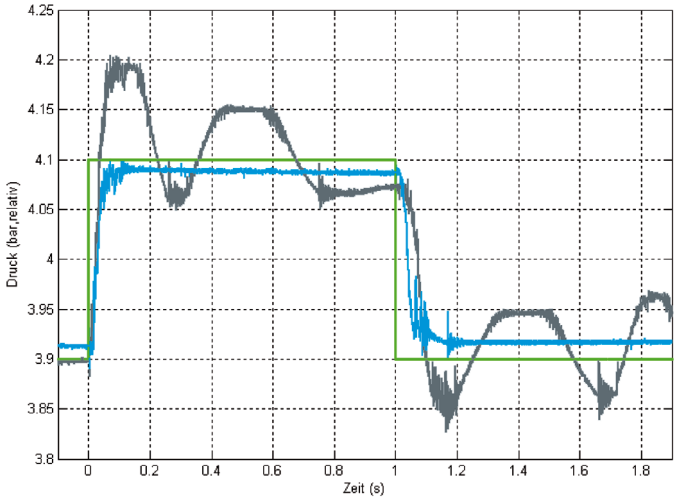


Stable control: close to the ideal setpoint curve with multi-sensor control

- Setpoint value
- Working pressure curve "single controller"
- Working pressure curve "cascade ontrol"

Figure 3: Comparison of the working pressure curve of a single closed-loop controller and the cascade closed-loop controller of a proportional pressure regulator

**2. Proportional valve technology in process automation**

In process automation, inert gases and air are regulated at tanks, reactors, fermenters, mixers and other process equipment.
We would like to introduce you to this technology and its practical implementation using a laboratory for producing active pharmaceutical ingredients (API) as an example.

**2.1. Task definition**

Explosion protection requirements mean that it must be possible to create and maintain an inert atmosphere in process tanks (reactors) in a plant. This is done using nitrogen and argon which, depending on the process step, have to be regulated by means of pressure or flow rate.

The following functions are essentially covered:

- Inertisation, i.e. complete replacement of the contained gas volume (uncontrolled, high flow rate)
- Pressure blanketing (pressure control)
- Overflowing in containers and process tanks in the ongoing synthesis process (flow control)
- Material transfer to the centrifuge (pressure control)

In order to realise these steps and supply the mechanical seals of the agitators and centrifuges, previous plants required three pressure stages (40 mbar, 2.5 bar and 9 bar) with dedicated pipe systems. The stainless steel piping was fitted with regulating valves (poppet valves) and flow meters.

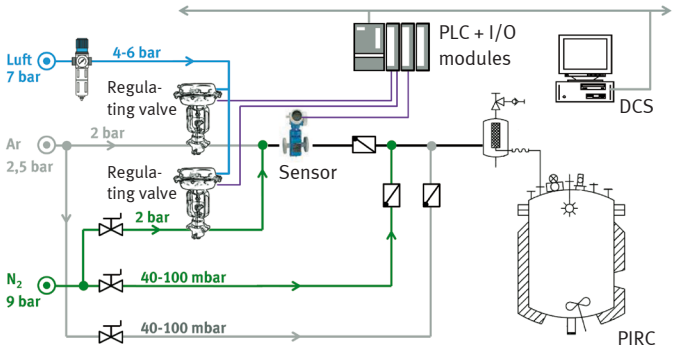


Figure 4: Inert gas control at a chemical reactor for manufacturing APIs

© Copyright 2014, Festo AG & Co. KG

Some of these functions are normally handled using manually adjustable pressure reducers or pressure relief valves. Dynamic closed-loop control systems are generally realised using regulating valves (poppet valves). Depending on the function, flow meters in the pipeline to the tank and/or a pressure sensor at the tank or process equipment are needed to transmit the flow rate and pressure values to the open-loop control system. Open-loop control and setpoint value specification are performed by the plant control system and the integrated closed-loop control module. The illustration on the right (Figure 5) shows a simplified installation at a reactor for manufacturing APIs.

The reactor shown is in a typical multi-purpose system where the process parameters need to be adjusted flexibly and frequently. The reactor is pressurised with either nitrogen or argon depending on the product and the process. Either the required pressure and/or the flow rate of the inert gases are regulated according to the process step.

During the plant planning stage, alternative and more flexible concepts for inert gas control were sought. The approach ultimately chosen was an open-loop control system using proportional pressure regulators with automation of the specified functions and process parameters.

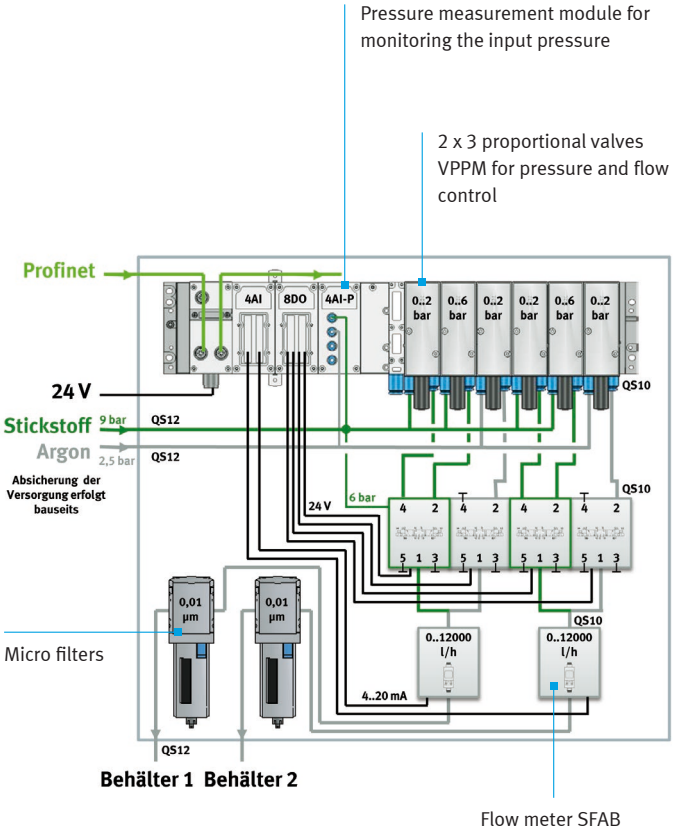


Figure 5: Structure of the Festo solution (inert gas station)

**2.2. The inert gas station system**

After the new technology was chosen, the specific implementation was planned. In the new laboratory, Festo proportional valves are used instead of the previous regulating valves. As there are two reactors per reactor room, each inert gas station is designed for two reactors due to the proximity of the units. Per container there is one valve for argon and two for nitrogen. The first valve has a pressure range of 0 – 2 bar and the second has a pressure range of 0 – 6 bar. The 0 – 2 bar variant permits more accurate closed-loop control with lower pressures and flow rates, while the 0 – 6 bar variant enables much higher flow rates to be realised. Depending on the function, the two valves can also be connected in series for fast filling followed by accurate closed-loop control. On the one hand, this guarantees the required accuracy for pressure blanketing, while on the other hand greater flows can be managed for inertisation, which necessitates higher outlet pressures.

The proportional pressure regulators are integrated on valve terminal MPA, which is connected to an automation platform CPX. The flow sensors were also removed from the piping at the reactor and moved to the control cabinet. They are connected to the 15-bit analogue input module of the CPX. A pressure meter module CPX measures the input pressures in the corresponding plant area. This continuous monitoring represents a significant improvement in terms of the diagnostics options compared to the previous approach, once a the pressure switch was installed for the entire plant at the central pressure reducer. At the same time, combining the functions for two reactors on one valve terminal reduced the purchasing and installation costs.

The risk of contamination is minimal thanks to the life-time lubrication of the valves, but for safety reasons the customer decided to fit a downstream micro filter with a 0.01 µm filter cartridge. After all, the process gases are in direct contact with the medical APIs. After the filter, the lines go directly to the reactor.

© Copyright 2014, Festo AG & Co. KG

### 2.3. Supply of the mechanical seals

In contrast to the initial plan, proportional valves were also used in the final version to supply the mechanical seals of the agitators in the station. In the existing old plants, the mechanical seals are supplied via the 9 bar nitrogen line. A manually adjustable pressure control valve is installed upstream of the seals. The disadvantages of this old solution are:

1. Little or no flexibility in multi-purpose plants. The supply pressure must be set manually for every batch, or it is set to the maximum pressure required from the start.
2. Higher operating costs and a potential source of error if the supply pressure must be checked manually for every batch and adjusted where applicable.
3. The seals must be dismantled from time to time for visual inspections and to check for wear. That is only possible if the plant is deactivated for maintenance purposes.
4. Higher nitrogen consumption and possibly more if the seal is always pressurised to the maximum pressure required.

In the new laboratory, proportional valves are also used. A proportional valve, a flow meter and a micro filter are additionally integrated in the inert gas station. The extra costs compared with the old solution with manually adjustable pressure control valves are relatively low due to the integration on the valve terminal. The new solution has the following advantages for the plant operator:

1. The pressure in the mechanical seal is adjusted to match the operating pressure in the reactor. The differential pressure between the operating pressure in the reactor and the mechanical seal always remains constant.
2. An additional single flow meter measures the seal's gas consumption. That allows the control system to detect deviations in good time. Visual inspections of the seal during maintenance are then no longer required or the cycles can be extended.
3. A pressure sensor in the automation platform CPX monitors the inlet pressure.
4. The valve terminal MPA is connected to the process control system via the automation module CPX and the integrated bus node. That allows all functions and values to be monitored and evaluated centrally.

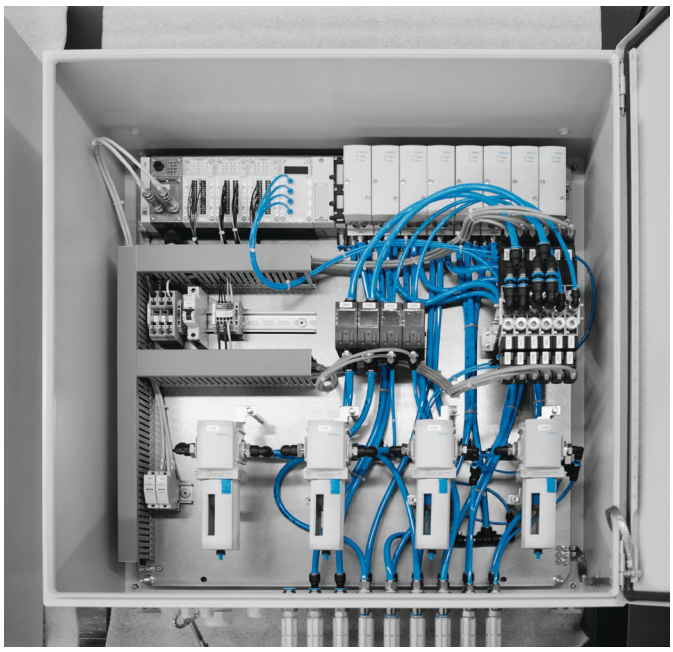

Figure 6: Inert gas station in a control cabinet for a reactor for regulating the pressure and flow of inert gases.

By integrating the supply of the mechanical seal in the inert gas station, eight proportional valves are installed in the control cabinet for two reactors.

The control cabinets were installed in the technology corridor (non-ATEX zone) outside the reactor rooms. The process connection is established via hoses which bridge the short distance between the control cabinets and the piping.

Compared with the old plants, the control valves, the positioners and the flow meters are no longer installed in the ATEX zone. That means that investment costs are lower and planning and risk assessment for the plant have been simplified.

© Copyright 2014, Festo AG & Co. KG

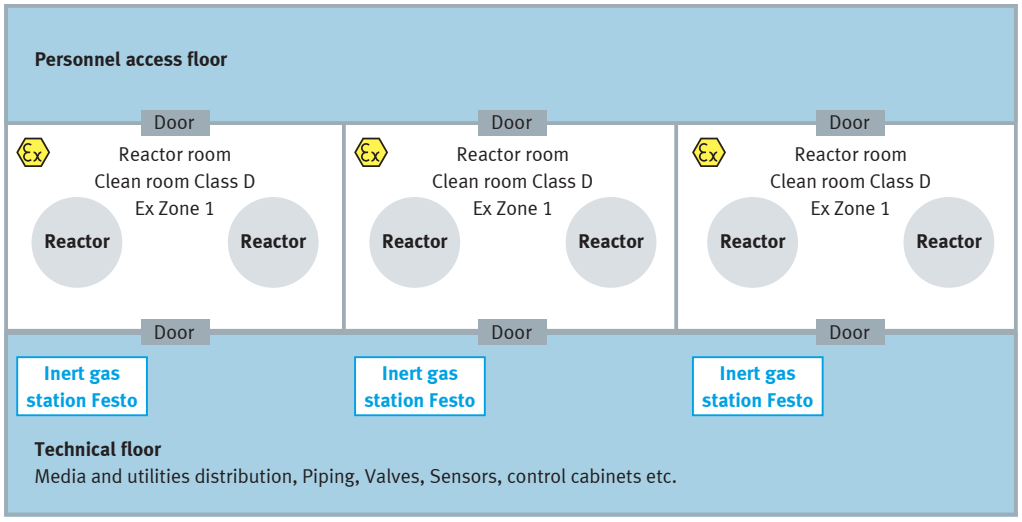


Figure 7: API production, schematic diagram of the layout and installation of the inert gas station at the customer's premises

During the plant planning phase, the operator decided to use the same technology for the centrifuges used to separate the APIs into solid and liquid matter as for the drying cabinets. That means that all process devices in the laboratory are supplied with nitrogen from one system.

**2.4. Integration in the control system**

As part of the project, the inert gas stations were connected to a Siemens PCS 7 system. The operator station was designed as a mobile unit which allows the two reactors in a reactor room to be controlled.

An extensive library of drivers is available for integrating the proportional valves and the I/O modules in the open-loop control system. As a result, custom rack and module components for the automation platform CPX are automatically generated when generating the module drivers. This makes programming (Figure 8) much easier as the programmer no longer needs to intervene manually.

This type of closed-loop control also requires a pressure sensor in the tank to be regulated and a PID control module in the open-loop control system. The right design of the control circuit for trouble free and reproducible operation is just as important for proportional valve technology as for other technical solutions.

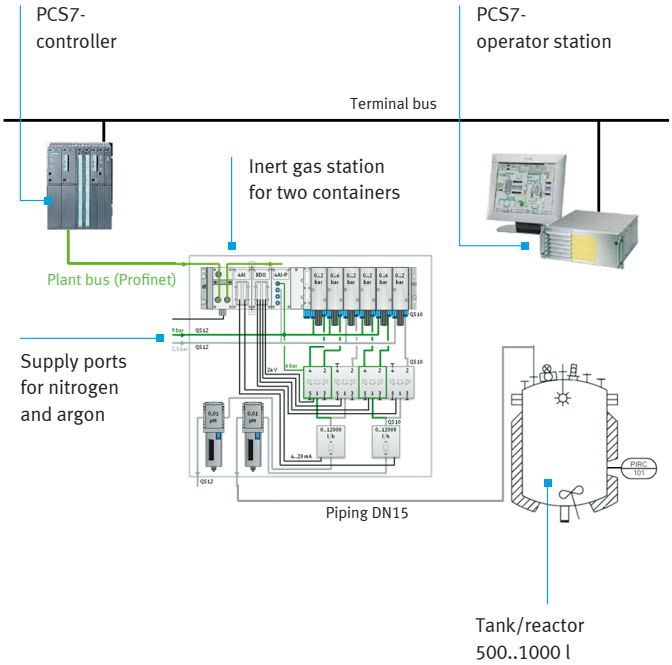


Figure 8: Inert gas station in a system network, only one process container is shown to increase clarity

© Copyright 2014, Festo AG & Co. KG

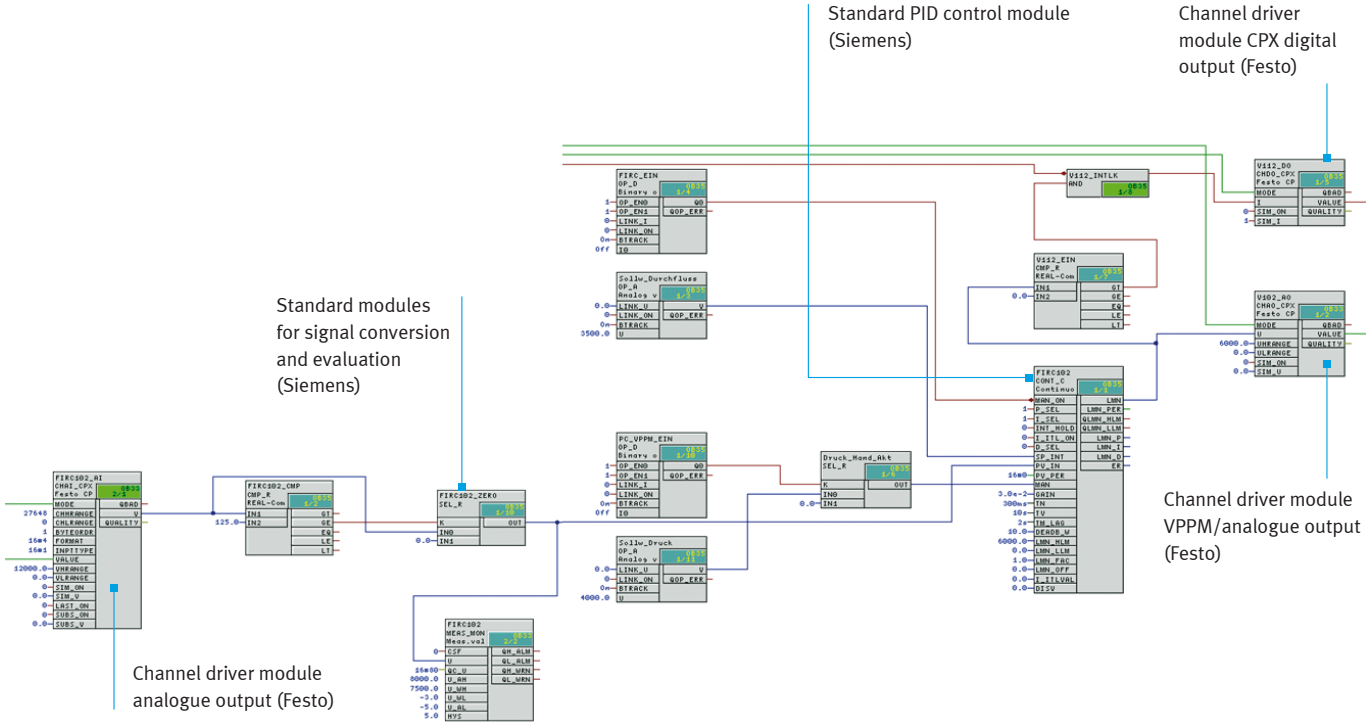


Figure 9: Programming the closed-loop flow controller in SIMATIC PCS 7

Tests were carried out in the laboratory using the new technology as part of the trials for the project. These tests proved the outstanding and fast closed-loop control characteristics of the installation (Figure 10). After the setpoint value for the required flow rate is changed, the cascade PID controller quickly adjusts the actual value to the new setpoint value without overshooting.

The setpoint value is reached faster and maintained with greater stability than with the previous solution using a single closed-loop controller. The setpoint value deviation for a setpoint value of 7,000 l/h is approx. 0.5 – 1% of the value.

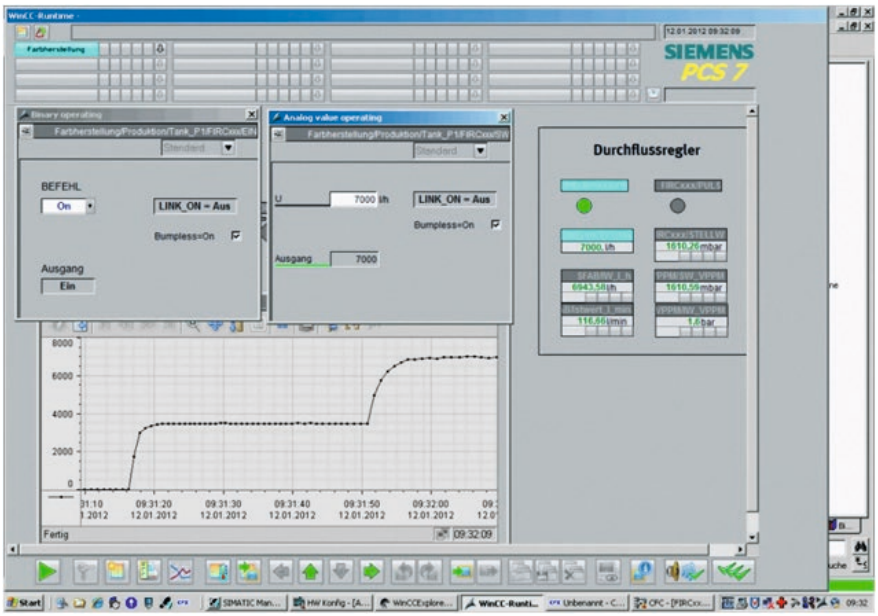


Figure 10: Flow curves of the plant's inert gas closed-loop controller during the system test

© Copyright 2014, Festo AG & Co. KG

### 3. Programming open-loop control of proportional valve technology in process automation

Compared with conventional technology, open-loop control using proportional valve technology requires a slight rethink in some areas when programming a process. Proportional pressure regulators have integrated pressure sensors which measure the pressure directly at the valve output. The pressure regulator in a proportional pressure regulator is always active. It must therefore be kept in mind that when the open-loop control system specifies a setpoint value for the proportional pressure regulator, the proportional valve always interprets and regulates the setpoint values as the outlet pressure of the valve.

#### 3.1. Inertisation

Inertisation generally consists of three successive cycles in which the tank is first evacuated and then returned to atmospheric pressure (pressure relieved) with nitrogen via the proportional valve.
To allow the required gas volume to flow into the tank quickly, it is recommended either to specify a high outlet pressure at the proportional valve or to operate the closed-loop flow controller with a correspondingly high setpoint value. The proportional valve is then fully opened. Both operations end as soon as the internal pressure in the tank has reached the required setpoint value. Simply connecting the proportional value with a very low setpoint value (e.g. 50 mbar gauge pressure) would result in a low flow rate and therefore a very slow increase in the pressure inside the tank. An inertisation cycle would then take longer.

Subsequent pressure blanketing of the closed tank after inertisation can be done using using pressure regulation. As with inertisation, the pressure is built up to the required setpoint value by specifying a higher outlet pressure. This is reduced to the actual setpoint value before the setpoint is reached. This approach does not extend the length of the inertisation operation any more than when using conventional single closed-loop control systems.

#### 3.2. Material transfer

For cells or proteins susceptible to shearing in biotechnological production, for example, the material transfer between two containers is not implemented via pumps but via a pressure cushion on the source tank container. First, the pressure in the source tank is preset to the necessary transfer pressure, for example 1.5 bar. Ideally this is done by means of closed-loop flow control with a high volumetric flow rate or by specifying an outlet pressure which is much higher than the actual transfer pressure. The proportional valve is then fully opened and the required transfer pressure is achieved quickly. When the required transfer pressure is reached, closed-loop pressure control can be activated. This compensates for the resulting pressure drop after the tank bottom valve opens and keeps the transfer pressure constant.

#### 3.3. Bottling

The use in production or bottling, for example in the food industry, is identical. Bottling machines generally have a source tank from which the product is fed to the bottling nozzle. The level in the source tank, which changes during the bottling process, causes the pressure conditions in the bottling lines to change. Depending on the medium, this leads to a greater variation of the bottling process with regard to the filled weight. As underfilling of the containers is generally not permitted, customers lose money with constant overfilling.

A proportional pressure regulator not only pressurises the supply tank, it adds an appropriate gas. This maintains a constant input pressure throughout the entire bottling process, irrespective of the fluctuating level. That reduces the variation of the filled weight, saving the customer money.

#### 3.4. Overflowing of a container

Overflowing a container with nitrogen to continuously displace explosion hazard gases during the process via the exhaust pipe, can be implemented with pressure or flow control depending on the process requirements. Pressure control is preferred with lower flow rates while flow control is better with high flow rates.

© Copyright 2014, Festo AG & Co. KG

**4. Assessment and advantages of proportional valve technology in process automation**

Like any other technical solution, the application described above has limitations that must be taken into consideration during the design process. Proportional valve technology using electromagnetic drives is currently available for connection sizes G¼ to G1. The proportional pressure regulator VPPM with a nominal size of DN ½" has a maximum flow rate of approx. 12,000 l/min. The components and materials used are currently only suitable for direct open-loop control of inert and neutral media. Closed-loop control of vapour, water (H2), oxygen (O2) or aggressive gases such as ammonia (NH3) is not currently possible due to material resistance or a lack of certification. Proportional pressure regulators can, however, be used for actuating e.g. poppet valves. This indirect application corresponds to the applications from factory automation described in Section 2.

From the point of view of the operator, the implementation described above, using proportional valve technology for inert gas control at the reactor has clear advantages:

- More flexible and straightforward open-loop control of the plant
- Lower installation costs
- Smaller space requirement in the plant
- For small nominal sizes of up to ½", stainless steel pipes can be replaced with easy-to-install and much cheaper hoses
- Reduced explosion protection requirements thanks to control cabinet installation in the non-ATEX zone
- Extended diagnostics options by integrating the proportional valves on the valve terminal

Proportional valve technology is therefore an interesting alternative for closed-loop control of inert gases in process automation.

**Author:**
Thomas Schulz
Head of Industry Segment and
Key Account Management
Biotech/Pharma/Cosmetics

Festo AG & Co. KG
Rechbergstrasse 19
73770 Denkendorf, Germany
Tel.: +49 711 347 52192
E-mail: thss@de.festo.com

© Copyright 2014, Festo AG & Co. KG