Quickly regulated

The one-way flow control valve VFOE makes it much easier to manually regulate the flow of a pneumatic cylinder.
This compact and cost-efficient solution differs in several ways from other one-way flow control valves with check valve.

Easy to use
The regulator knob has an indicator so set values can be identified and the system can be locked.

Light and compact
Thanks to the use of lightweight polymer, the VFOE is 50% lighter than the sturdy GRLA-D.
The compact design also saves space.

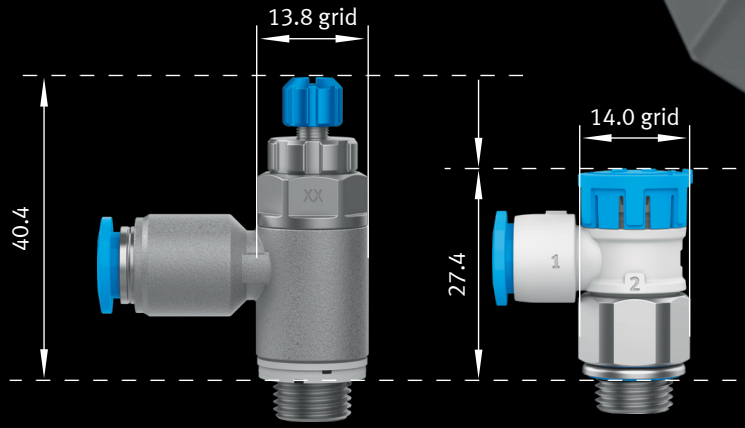

GLRA-QS-RS-D
Size 1/8"

VFOE-...
Size 1/8"

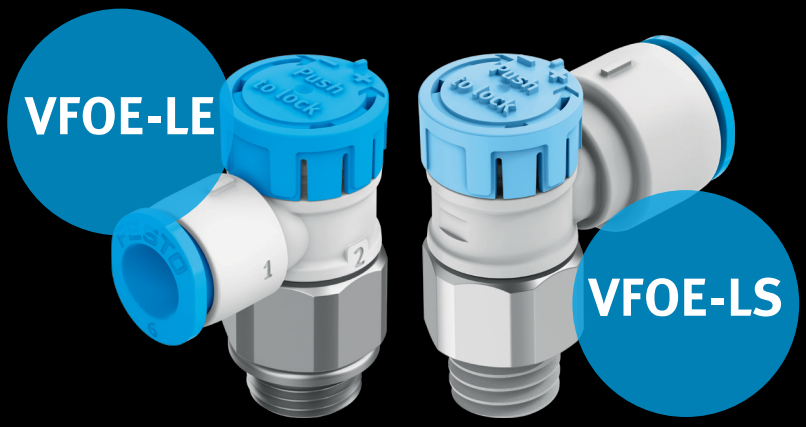

FESTO

Different colour, different version
With the blue knob for exhausting and the light blue one for pressurisation it is really easy to recognise the different functions.

Various sizes
Available in M5 thread up to ½" and tubing connection 4 to 12 mm, with both tapered [R] and parallel [G] thread. Also available in cost-effective bulk packaging.



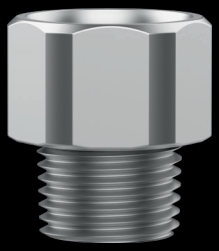
BSP-R draad


BSP-G draad

Core Range ★
The VFOE is part of the Festo Core Range and is quickly available worldwide. VFOE can be easily combined with other products from the Festo Core Range, such as the tubing PUN-H and popular cylinders such as DSBC and DSNU.

→ **www.festo.uk/vfoe**